Fema Regelgeräte
Honeywell AG
Böblinger Straße 17
D-71101 Schönaich

Setting the Switching Point

The interrelation between air speed and resistance change is **not linear**. In the lower range (low rates of flow) the change of resistance is very large. In the upper range, the change of resistance at identical changes in the rate of flow becomes increasingly smaller. When setting the switching point, it must first be determined what change is to be monitored, since some settings result in certain disadvantages. The following requirements must be taken into consideration:

Low change in the rate of flow in the high flow speed range: the switching point must be chosen very close to the measuring value of the normal flow, since the change of measuring values is very small when the rate of flow changes. Since the temperature compensation exhibits a certain amount of delay in comparison to the actual change of temperature, such a setting of the switching point is possible only with slow changes of temperature.

Low change in the rate of flow in the low flow speed range: the switching point may be selected at a greater distance from the measuring value of the normal rate of flow, since the changes of the measuring values are larger when the rate of flow changes. A change in temperature has no effect on the switching behavior.

Large change in the rate of flow: in most cases like this a simple yes/no statement is desired (e.g. ventilator running or ventilator stopped). Therefore, a larger safety margin may be selected, so that neither temperature changes nor turbulence have any influence on the switching behavior.

Commissioning of KSL..

Start-up bypass

Jumper set	= start-up bypass active for approx. 60 sec. Yellow LED „Time“ is on
Jumper not set	= start-up bypass inactive

Connection and commissioning must be performed by properly authorized and qualified personnel!
When commissioning and adjusting the devices, the following procedure is recommended:

- Install and connect the flow controller in accordance with installation instructions and conditions.
- Set jumper for start-up bypass, if required.
- Set trimmer „Sensitivity“ to minimum sensitivity (left limit stop).
- Connect mains voltage. The green LED lights up. If the jumper has been set, the start-up bypass procedure will be executed (approx. 60 sec.).
- Set nominal rate of flow.
- Slowly turn trimmer „Sensitivity“ clockwise until the yellow LED lights up and the signal output switches. In order to avoid erroneous switching at low changes of flow, turn the potentiometer slightly past the switching point.
- To check the function of the flow controller, reduce or stop the flow.
- The yellow LED will go off (output relay at RLSW4R is released).

The device is now set to function.

Trouble shooting

Problem	Possible Cause	Corrective Action
KSL... does not function at all	None or wrong mains voltage connected	Check mains voltage and connection
KSL... does not detect flow	Sensor not installed correctly	Check installation conditions
KSL... exhibits changed tripping behavior	Sensor heavily contaminated by the medium	Carefully clean sensor with water
KSL... switches at rapid temperature increase of the medium	Temperature gradient is outside of technical specifications	Turn potentiometer „Sensitivity“ slightly further clockwise. Check temperature gradient of the system.

Should you have any further questions, please contact

TELEFON: 0 70 31 / 637-02 • FAX: 0 70 31 / 637-850 • INTERNET: http://www.honeywell.de/fema
BANKEN: Deutsche Bank AG Böblingen 05 / 89 200 (BLZ 600 700 70) • Volksbank Schönbuch eG 784 001 (BLZ 603 628 04)
VORSTAND: Horst Bellwied, Regine Blickwede, Joachim Frosch, Wolfgang Fuchs, Horst Wild, Michael Löffler (stellv.)
VORSITZENDER DES AUFSICHTSRATES: Arnold Günther • SITZ: Offenbach am Main, Amtsgericht Offenbach am Main 5 HRB 6225
22.08.2001

Honeywell

Fema Regelgeräte
Honeywell AG
Böblinger Straße 17
D-71101 Schönaich

Airflow Controller

Operating Instructions for Airflow Controller KSL..

TELEFON: 0 70 31 / 637-02 • FAX: 0 70 31 / 637-850 • INTERNET: http://www.honeywell.de/fema
BANKEN: Deutsche Bank AG Böblingen 05 / 89 200 (BLZ 600 700 70) • Volksbank Schönbuch eG 784 001 (BLZ 603 628 04)
VORSTAND: Horst Bellwied, Regine Blickwede, Joachim Frosch, Wolfgang Fuchs, Horst Wild, Michael Löffler (stellv.)
VORSITZENDER DES AUFSICHTSRATES: Arnold Günther • SITZ: Offenbach am Main, Amtsgericht Offenbach am Main 5 HRB 6225
22.08.2001

Fema Regelgeräte
Honeywell AG
Böblinger Straße 17
D-71101 Schönaich

The calorimetric airflow controller KSL.. represents an economical alternative to the common pressure pickup. The installation is simple and quick by means of a flange mount (for channel installation) or by means of the PG7 threaded connector. The switching point can be selected infinitely with the integrated potentiometer. In case a flow is present, the switching output is conductive (yellow LED in the unit is on).

Proper use
The flow controllers of the series KSL.. are intended to be used in monitoring of flow speeds of gaseous media within the specified technical data. A main area of application is heating, ventilating and air conditioning in the field of automated building systems.

Function principle
The flow controllers of the series KSL.. function according to the calorimetric principle. The units are switched when a certain pre-selected threshold value is reached. In the calorimetric measuring principle a temperature-sensitive resistor is heated. The heating procedure is achieved by a separate heating resistor. Flow in the medium dissipates heat from the precision resistor, the temperature of the resistor changes and thus its resistance value. This change is evaluated by the unit. However, not only the flow speed of the medium has an influence of the dissipated amount of heat, but also its temperature, therefore a relation between flow and temperature must be established. This is achieved by a second, temperature-dependent precision resistor near the first one. The second precision resistor (temperature compensation) is not heated and serves to measure the temperature only.

Flow > / = threshold value	signal output switched	yellow LED „Airflow" is on
Flow < threshold value	signal output not switched	yellow LED „Airflow" is off

Specifications

Type	KSL24	KSL230
Operating voltage	24 V AC/DC	230 V/AC
Voltage tolerance	±10%	±10%
Overvoltage category	II	II
Signal display, voltage	green LED	green LED
Power consumption, max.	2 VA	4 VA
Ambient temperature, unit	-20..+60°C	-20..+60°C
Signal output flow	1 change-over contact	1 change-over contact
Current and contact load capacity	250 VAC, 6 A, 1.5 kVA	250 VAC, 6 A, 1.5 kVA
Switching function at flow	relay picks up	relay picks up
Signal display at flow	yellow LED	yellow LED
Start-up bypass	60 s (activated by jumper)	60 s (activated by jumper)
Display of start-up bypass	yellow LED	yellow LED
Media temperature range	-10..+80°C	-10..+80°C
Temperature gradient	15 K/min	15 K/min
Switching point	adjustable with pot	adjustable with pot
Measuring range	0.1 – 30 m/s	0.1 – 30 m/s
Sensor	integrated	integrated
Immersion depth	130 mm	130 mm
Process connection	PG7, mounting flange	PG7, mounting flange
Sensor material	MS58, nickel-plated	MS58, nickel-plated
Pressure resistance	10 bar	10 bar
Type of protection, housing	IP65	IP65
Type of protection, sensor	IP67	IP67
Contamination class	2	2
Connection	5 terminals, 2.5 mm²	5 terminals, 2.5 mm²
Housing dimensions	L 56 mm, W 84 mm, H 80 mm	L 56 mm, B 84 mm, H 80 mm
Certification symbols	0	0
Accessory	Mounting flange	Mounting flange

Honeywell

Fema Regelgeräte
Honeywell AG
Böblinger Straße 17
D-71101 Schönaich

ATTENTION!

Connection and commissioning must be performed by properly authorized and qualified personnel!
Connection to mains supply (L, N) must be made by means of a protected isolating switch with the usual fuses. As a matter of principle, the General VDE Regulations must be complied with (VDE 0100, VDE 0113, VDE 0160). If the potential-free contact is connected to an extra-low safety voltage, sufficient insulation must be provided for the connecting cables up to the terminal, since otherwise the double insulation to the mains voltage side may be impaired. The current load capacity of the potential-free contact is limited to 6 A. Therefore, the electrical circuit of the potential-free contact must be protected by a 6.3 A fuse.

Installation Conditions KSL..

To avoid malfunctions, the following points should be observed.

- The tip of the sensor should be as close as possible to the center of the pipe. The transverse hole in the shaft of the sensor must be within the full flow of the gaseous medium.
- The marking is intended as an assembly aid.
- In case of vertical pipes, the direction of flow should be upwards.
- maintain a free inlet distance of 5xD upstream of the sensor and 3xD outlet distance downstream of the sensor.
- Screw in the flow controller by means of the hexagon of the sensor housing only.
- The flow controller can be installed in any position.

Electrical connection

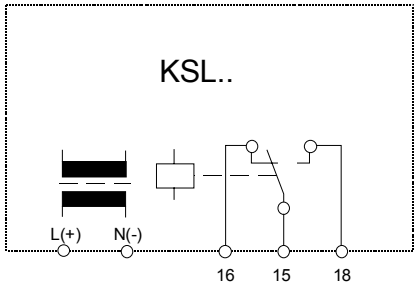

Dimensions

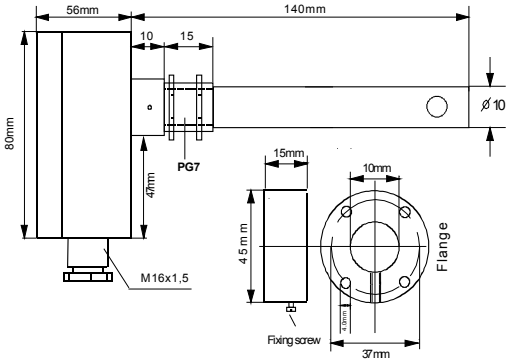

TELEFON: 0 70 31 / 637-02 • FAX: 0 70 31 / 637-850 • INTERNET: http://www.honeywell.de/fema
BANKEN: Deutsche Bank AG Böblingen 05 / 89 200 (BLZ 600 700 70) • Volksbank Schönbuch eG 784 001 (BLZ 603 628 04)
VORSTAND: Horst Bellwied, Regine Blickwede, Joachim Frosch, Wolfgang Fuchs, Horst Wild, Michael Löffler (stellv.)
VORSITZENDER DES AUFSICHTSRATES: Arnold Günther • SITZ: Offenbach am Main, Amtsgericht Offenbach am Main 5 HRB 6225
22.08.2001